Technical Data Sheet

Date: 26/01/2024

110x180x70 - Thermoplastic Enclosure

HF Ref. No: 3310-214-0600
HF-FR Ref. No: 3310-214-0077



Pack. Unit	Weight
60	250 gr.

Technical Informations

Lid Connection	Screw Lid
Lid Type	Opaque Lid
Product Type	Halogen Free
Protection Class	IP 67
Housing Material	ABS
Cable Gland Entry	10 Pieces
Liquid Foaming	☑

Dimensions

a	118
b	189
c	107
d	189
e	72
f	66
g	50
h	120
k	90
m	119

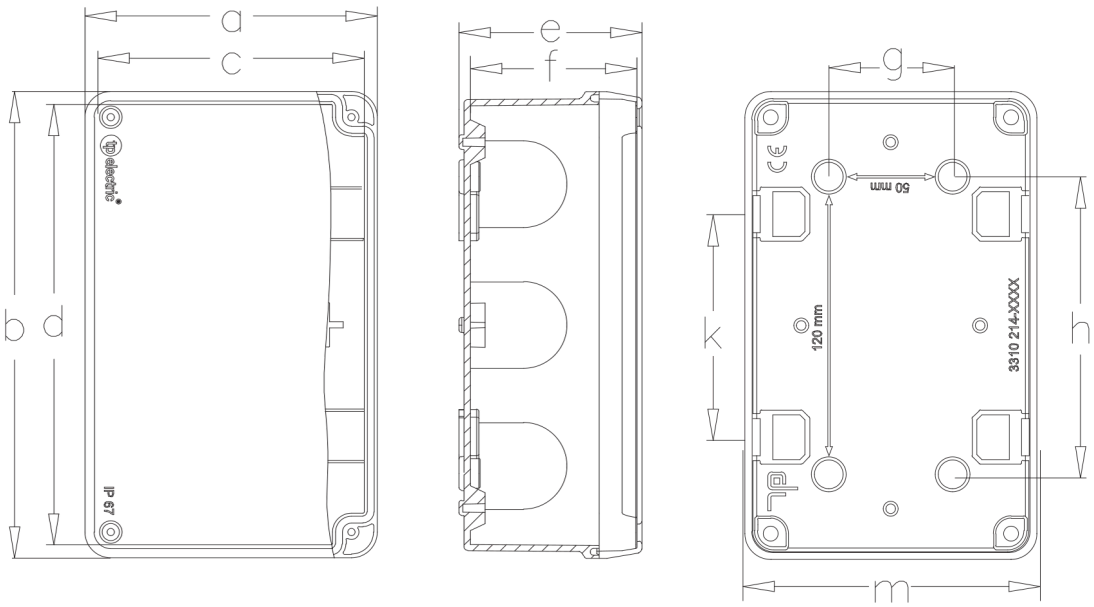

Tel: +90 232 880 90 01
Fax: +90 232 880 90 02

info@tpelectric.com.tr

Kemalpaşa O.S.B. 600 Sk. No:364
35730 Kemalpaşa - İZMİR / TÜRKİYE