Technical Data Sheet

Date: 03/11/2022

3x32A CEE Norm Plug

Ref. No: 3125-301-0900



Pack Unit	Weight
10	223 gr.

Technical Informations

Ampere	32A
Voltage	200 - 250 V. AC
Hertz	50 - 60 Hz
Protection Class	IP 67
Clock Postion	6h
Number Of Poles	3 (2P + E)
Contact Material	Brass (CuZn)
Housing Material	PA6
Connection Type	Screw
Operation Temp. (-25 / +40IEC60309)	-25 / +80 (1 hour -100° C)

Dimensions

a	149
b	100
c	93
Ød	11-20,5
Cable Diameter (Min.)	2,5 mm²
Cable Diameter (Max.)	6 mm²

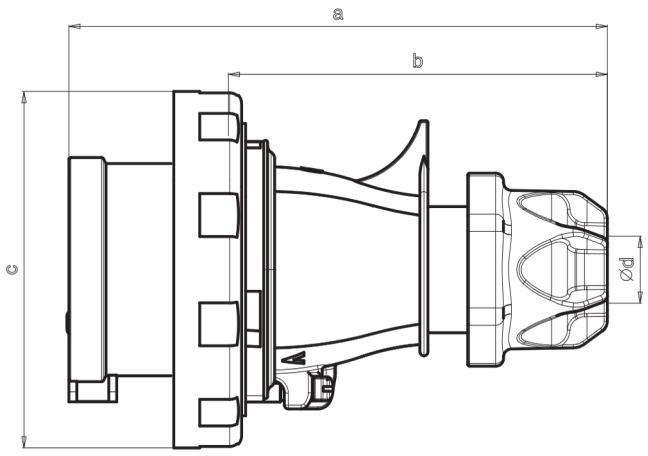

Different Earth Contact Positions (Clock Positions)

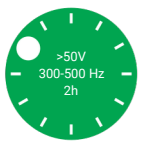	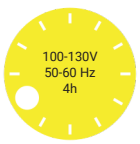	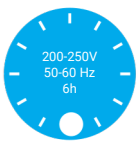		
3125-301-1100-2h	3125-301-0700-4h	3125-301-0900	3125-301-0300-7h	3125-301-1600-9h

Tel: +90 232 880 90 01
Fax: +90 232 880 90 02

info@tpelectric.com.tr

Kemalpaşa O.S.B. 600 Sk. No:364
35730 Kemalpaşa - İZMİR / TÜRKİYE