TEKNİK DOKÜMAN
TECHNICAL DATASHEET

tp electric
industrial plugs & sockets

Düz Fiş
Plug

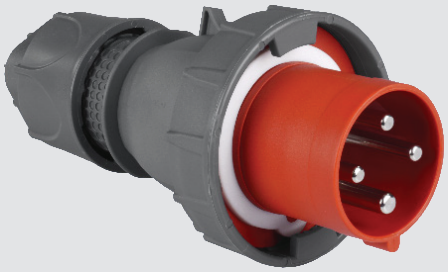

IP67 **Vidalı Bağlantı**
Screw Connection

Kutu Adedi Pack Unit	Ağırlık (Gr.) Weight (Gr.)	Kontak / Amper Poles / Ampere	100-130V 50-60 Hz 4h	200-250V 50-60 Hz 3P= 6h 4P-5P = 9h	380-415V 50-60 Hz 3P= 9h 4P-5P= 6h	480-500V 50-60 Hz 7h	>50-500V 300-500 Hz 10h	>50-500V 100-300 Hz 2h
			Kod / Cat. No.	Kod / Cat. No	Kod / Cat. No	Kod / Cat. No	Kod / Cat. No	Kod / Cat. No
4	737	**3x63**	3129-301-0700-4h	**3129-301-0900**	3129-301-1600-9h	3129-301-0300-7h		3129-301-1100-2h
4	781	**4x63**	3132-301-0700-4h	3132-301-0900-9h	**3132-301-1600**	3132-301-0300-7h	3132-301-1100-10h	3132-301-1100-2h
4	793	**5x63**	3134-301-0700-4h	3134-301-0900-9h	**3134-301-1600**	3134-301-0300-7h		3134-301-1100-2h
2	1264	**4x125**	3137-301-0700-4h	3137-301-0900-9h	**3137-301-1600**	3137-301-0300-7h	3137-301-1100-10h	3137-301-1100-2h
2	1378	**5x125**	3138-301-0700-4h	3138-301-0900-9h	**3138-301-1600**	3138-301-0300-7h		3138-301-1100-2h

Teknik Resim
Technical Drawing

Kontak-Amper Poles-Ampere	**3-4-5 x63A**	**4-5 x125A**
a	241,5	290
b	171	203
c	115	132
Ød	14,5-36	25-49
Kablo Kesiti (mm²) (Flex / Rigid) Cable Dia. (mm²)	6-16	16-50

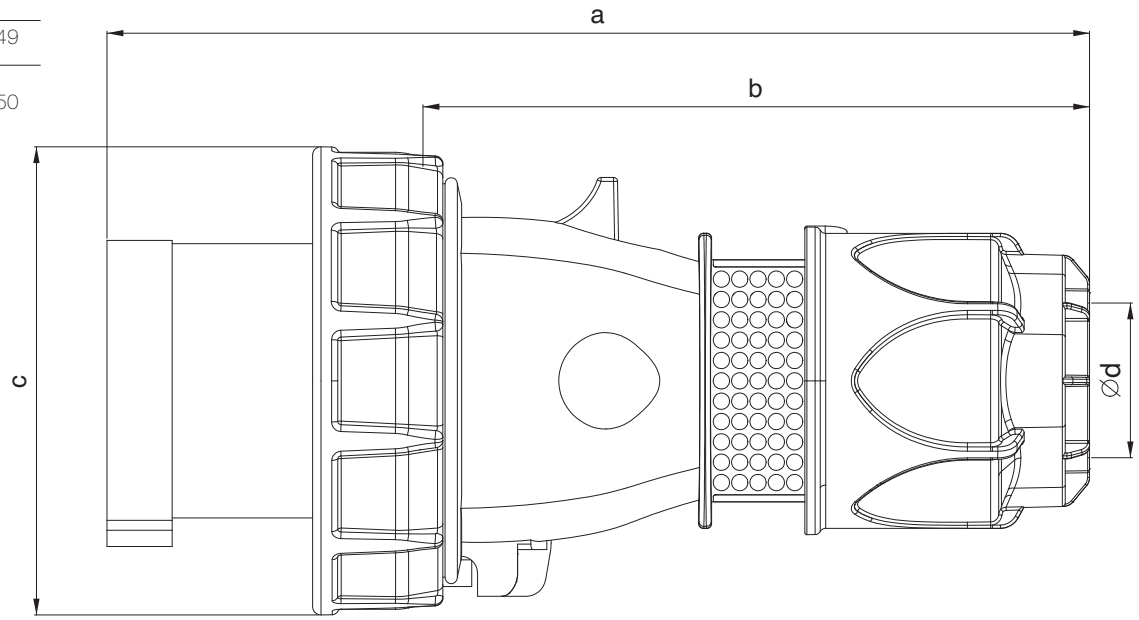

Tel: +90 232 880 90 01
Fax: +90 232 880 90 02
info@tpelectric.com.tr
Kemalpasa O.S.B. 600 Sk. No:364
35730 Kemalpasa / IZMIR - TURKEY