TEKNİK DOKÜMAN
TECHNICAL DATASHEET

tp electric
industrial plugs & sockets

Eğik Makine Prizi
Pan. Mount Soc. (Angled)



IP67 **Vidalı Bağlantı**
Screw Connection

Kutu Adedi Pack Unit	Ağırlık (Gr.) Weight (Gr.)	Kontak / Amper Poles / Ampere	100-130V 50-60 Hz 4h	200-250V 50-60 Hz 3P= 6h 4P-5P = 9h	380-415V 50-60 Hz 3P= 9h 4P-5P= 6h	480-500V 50-60 Hz 7h	>50-500V 300-500 Hz 10h	>50-500V 100-300 Hz 2h
			Kod / Cat. No.	Kod / Cat. No	Kod / Cat. No	Kod / Cat. No	Kod / Cat. No	Kod / Cat. No
5	240	**3x16**	3121-309-0700-4h	**3121-309-0900**	3121-309-1600-9h	3121-309-0300-7h	3121-309-1100-10h	3121-309-1100-2h
5	249	**4x16**	3123-309-0700-4h	3123-309-0900-9h	**3123-309-1600**	3123-309-0300-7h	3123-309-1100-10h	3123-309-1100-2h
5	297	**5x16**	3106-309-0700-4h	3106-309-0900-9h	**3106-309-1600**	3106-309-0300-7h	3106-309-1100-10h	3106-309-1100-2h
5	299	**3x32**	3125-309-0700-4h	**3125-309-0900**	3125-309-1600-9h	3125-309-0300-7h	3125-309-1100-10h	3125-309-1100-2h
5	317	**4x32**	3127-309-0700-4h	3127-309-0900-9h	**3127-309-1600**	3127-309-0300-7h	3127-309-1100-10h	3127-309-1100-2h
5	328	**5x32**	3108-309-0700-4h	3108-309-0900-9h	**3108-309-1600**	3108-309-0300-7h	3108-309-1100-10h	3108-309-1100-2h

Teknik Resim
Technical Drawing

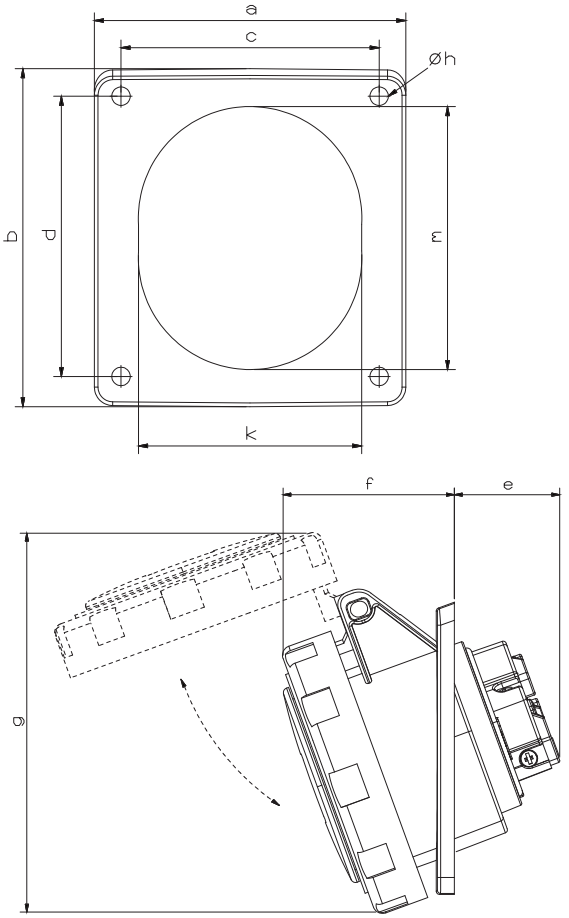

Kontak-Amper Poles-Ampere	3x16A	4x16A	5x16A	3x32A	4x32A	5x32A
a	83	83	83	83	83	83
b	90	90	90	90	90	90
c	70	70	70	70	70	70
d	76	76	76	76	76	76
e	33	33	33	37	37	41
f	50	52	55	62	62	59
g	103	109	119	125	125	133
Øh	5	5	5	5	5	5
k	52	56	62	66	66	72
m	65	68	72	76	76	82
Kablo Kesiti (mm²) (Flex / Rigid) Cable Dia. (mm²)	1-4	1-4	1-4	2,5-10	2,5-10	2,5-10

Tel: +90 232 880 90 01
Fax: +90 232 880 90 02

info@tpelectric.com.tr

Kemalpasa O.S.B. 600 Sk. No:364
35730 Kemalpasa / IZMIR - TURKEY