TEKNİK DOKÜMAN
TECHNICAL DATASHEET

tp electric
industrial plugs & sockets

Eğik Makine Prizi
Panel Mount Socket Outlet (Angled)



IP44 **Vidalı Bağlantı**
Screw Connection

Kütü Adedi Pack Unit	Ağırlık (Gr.) Weight (Gr.)	Kontak / Amper Poles / Ampere	100-130V 50-60 Hz 4h	200-250V 50-60 Hz 3P= 6h 4P-5P = 9h	380-415V 50-60 Hz 3P= 9h 4P-5P= 6h	480-500V 50-60 Hz 7h	>50-500V 300-500 Hz 10h	>50-500V 100-300 Hz 2h
			Kod / Cat. No.	Kod / Cat. No	Kod / Cat. No	Kod / Cat. No	Kod / Cat. No	Kod / Cat. No
4	450	**3x63**	3128-309-0700-4h	**3128-309-0900**	3128-309-1600-9h	3128-309-0300-7h		3128-309-1100-2h
4	500	**4x63**	3131-309-0700-4h	3131-309-0900-9h	**3131-309-1600**	3122-309-0300-7h	3122-309-1100-10h	3122-309-1100-2h
4	580	**5x63**	3133-309-0700-4h	3133-309-0900-9h	**3133-309-1600**	3133-309-0300-7h		3133-309-1100-2h

Teknik Resim
Technical Drawing

Kontak-Amper Poles-Ampere	**3-4-5 x63A**
a	100
b	107
c	77
d	85
e	68
f	77
g	140
Øh	7
k	80
m	95
n	155
Kablo Kesiti (mm²) (Flex / Rigid) Cable Dia. (mm²)	6-25

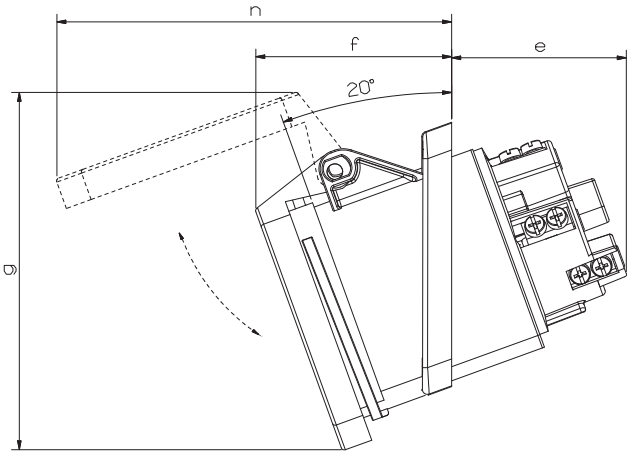

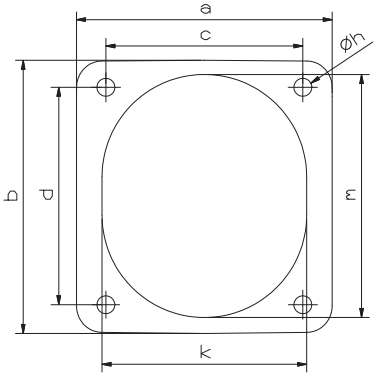

Tel: +90 232 880 90 01
Fax: +90 232 880 90 02
info@tpelectric.com.tr
Kemalpasa O.S.B. 600 Sk. No:364
35730 Kemalpasa / IZMIR - TURKEY