TEKNİK DOKÜMAN
TECHNICAL DATASHEET

tp electric
industrial plugs & sockets

Eğik Makine Prizi
Panel Mount Socket Outlet (Angled)



IP67 **Vidalı Bağlantı**
Screw Connection

Kutu Adedi Pack Unit	Ağırlık (Gr.) Weight (Gr.)	Kontak / Amper Poles / Ampere	100-130V 50-60 Hz 4h	200-250V 50-60 Hz 3P= 6h 4P-5P = 9h	380-415V 50-60 Hz 3P= 9h 4P-5P= 6h	480-500V 50-60 Hz 7h	>50-500V 300-500 Hz 10h	>50-500V 100-300 Hz 2h
			Kod / Cat. No.	Kod / Cat. No	Kod / Cat. No	Kod / Cat. No	Kod / Cat. No	Kod / Cat. No
4	523	**3x63**	3129-309-0700-4h	**3129-309-0900**	3129-309-1600-9h	3129-309-0300-7h		3129-309-1100-2h
4	611	**4x63**	3132-309-0700-4h	3132-309-0900-9h	**3132-309-1600**	3132-309-0300-7h	3132-309-1100-10h	3132-309-1100-2h
4	649	**5x63**	3134-309-0700-4h	3134-309-0900-9h	**3134-309-1600**	3134-309-0300-7h		3134-309-1100-2h
2	935	**4x125**	3137-309-0700-4h	3137-309-0900-9h	**3137-309-1600**	3137-309-0300-7h	3137-309-1100-10h	3137-309-1100-2h
2	1048	**5x125**	3138-309-0700-4h	3138-309-0900-9h	**3138-309-1600**	3138-309-0300-7h		3138-309-1100-2h

Teknik Resim
Technical Drawing

Kontak-Amper Poles-Ampere	3-4-5 x63A	4-5 x125A
a	100	114
b	107	116
c	77	90
d	85	90
e	68	87
f	77	80
g	145	152
Øh	7	7
k	80	95
m	95	105
n	155	164
Kablo Kesiti (mm²) (Flex / Rigid) Cable Dia. (mm²)	6-25	25-70

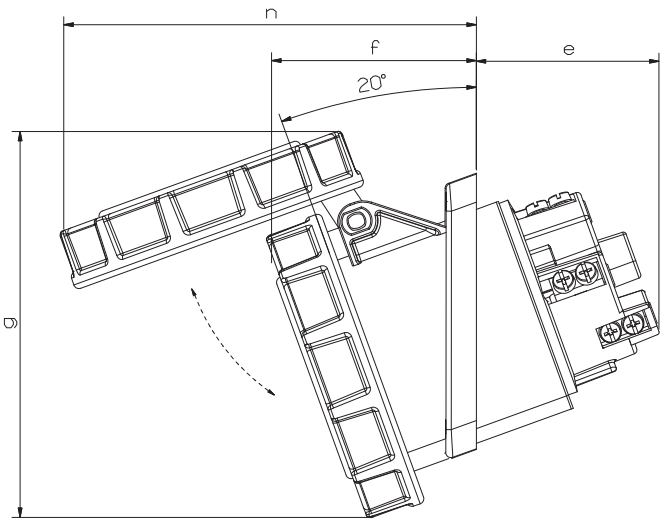

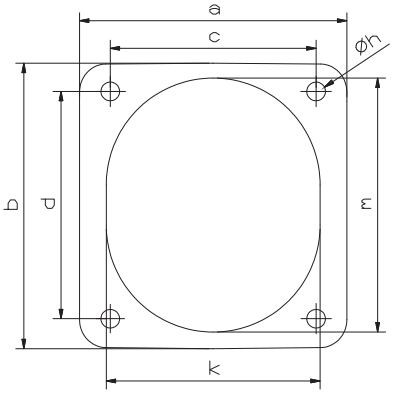

Tel: +90 232 880 90 01
Fax: +90 232 880 90 02

info@tpelectric.com.tr

Kemalpasa O.S.B. 600 Sk. No:364
35730 Kemalpasa / IZMIR - TURKEY