Technical Data Sheet

Date: 03/11/2022

3x16A CEE N. Panel Mount Socket Outlet

Ref. No: 3120-322-0975



Pack Unit	Weight
10	140 gr.

Technical Informations

Ampere	16A
Voltage	200 - 250 V. AC
Hertz	50 - 60 Hz
Protection Class	IP 44
Clock Postion	6h
Number Of Poles	3 (2P + E)
Contact Material	Brass (CuZn)
Housing Material	PA6
Connection Type	Screw
Operation Temp. (-25 / +40IEC60309)	-25 / +80 (1 hour -100° C)

Dimensions

a	75	**e**	19
b	75	**f**	49
c	60	**g**	95
d	60	**Øh**	5,5
Cable Diameter (Min.)	1 mm²	**Øl**	44
Cable Diameter (Max.)	4 mm²	**k**	86

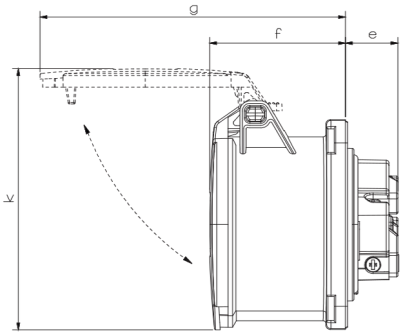

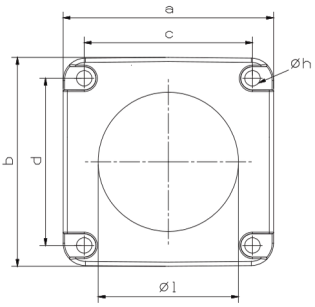

Different Earth Contact Positions (Clock Positions)

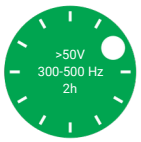	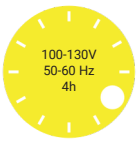			
3120-322-1175-2h	3120-322-0775-4h	3120-322-0975	3120-322-0375-7h	3120-322-1675-9h

Tel: +90 232 880 90 01
Fax: +90 232 880 90 02

info@tpelectric.com.tr

Kemalpaşa O.S.B. 600 Sk. No:364
35730 Kemalpaşa - İZMİR / TÜRKİYE