tp electric®
industrial plugs & sockets

230x300
MOBILBOX

MADE IN TÜRKİYE MADE IN

230x300 Mobilbox

Power Distribution Box With 3M Cabled Plug										
Configuration	IP 44 - CEE Norm Straight Socket-İnlet				1x16A Schuko Socket	Protection		Connection	Total Power	Product No
	4x16A	5x16A	4x32A	5x32A		RCCB	MCB			
		2 Front		2 Back	2+2 = 4 Side	1 x 40A/4P/0,03A (TYP AC 40TR) (TYP A 40EU)	2 x 32A 3P-C 2 x 16A 1P-C	3M Cable H07RN-F 5G4 CEE-Plug 32A 5P 400V	15 Kw	3333-004-5272

Power Distribution Box With Panel Mount İnlet										
Configuration	IP 44 - CEE Norm Straight Socket-İnlet				1x16A Schuko Socket	Protection		Connection	Total Power	Product No
	4x16A	5x16A	4x32A	5x32A		RCCB	MCB			
		2 Front		2 Back	2+2 = 4 Side	1 x 40A /4P/0,03A (TYP AC 40TR) (TYP A 40EU)	2 x 16A 3P-C 2 x 16A 1P-C	CEE-İnlet 32A 5P 400V	15 Kw	3334-004-5771

Pre-drilled Empty Power Distribution Box			
Configuration	IP 44 - CEE Norm Straight Socket-İnlet	1x16A Schuko Socket	Product No
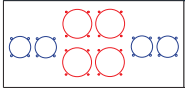	Suitable for all CEE panel mount plugs and sockets with 75x75 flange size: 4 products can be assembled.	Up to 4 panel sockets can be installed	3334-411-1112

Blank Power Distribution Box		
Configuration	Product Description	Product No
Blank	230x300 mobilbox	3334-000-0000

- 13 modules inside the cover.
- Cable and inlet connection options.
- It can be easily stacked.
- The box has IP44 protection.

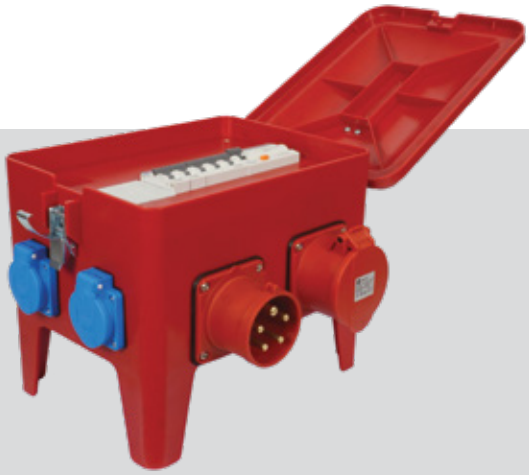

Mechanical Specifications

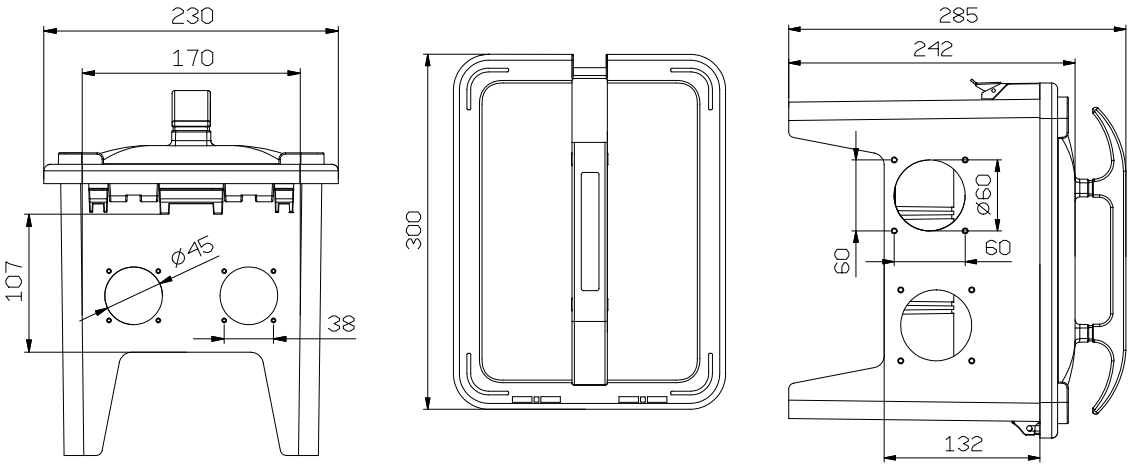

Thanks to it is handle, easily moveable

Durable ABS material

Thanks to its Support Legs, it is protected against liquid contact that may come from the ground.

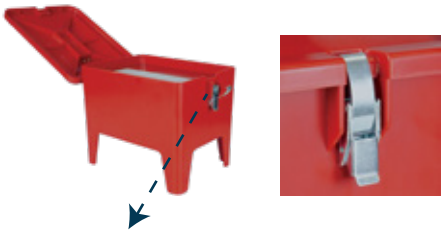

Cover can be easily closed and opened with the latch.

TP Electric
RCCB and MCB

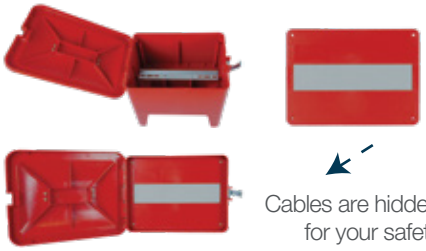

Cables are hidden for your safety

It can be stacked on top of each other with its practical design.

VDE and KEMA
certified, top-quality products

tp electric®
industrial plugs & sockets

RELIABLE INDUSTRIAL CONNECTION

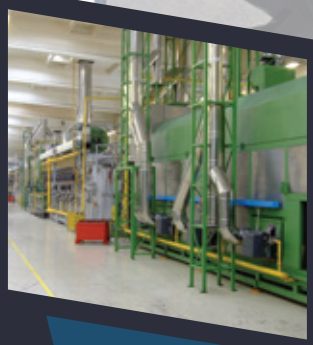

Contact Us

export@tpelectric.com.tr (+90) 537 597 95 04

Bize Ulaşın

Marmara Bölgesi
(+90) 533 930 18 85
(+90) 530 665 41 46
(+90) 533 272 87 56

Ege ve Batı Karadeniz Bölgesi
(+90) 530 280 16 00

Doğu ve Güneydoğu Anadolu Bölgesi
(+90) 533 729 25 24

İç Anadolu Bölgesi
(+90) 532 590 25 35

Bursa - Eskişehir Bölgesi
(+90) 533 257 47 42

Karadeniz Bölgesi
(+90) 537 397 70 82

Konya - Kayseri Bölgesi
(+90) 533 894 91 32

Kemalpaşa OSB Mah. 600. Sk. No: 364 35730 Kemalpaşa - İZMİR
info@tpelectric.com.tr (+90) 232 880 90 01

tpelectric tpelectric tpelectricofficial tpelectric

www.tpelectric.com.tr