TEKNİK DOKÜMAN
TECHNICAL DATASHEET

tp electric
industrial plugs & sockets

Switched Interlocked Duvar Prizi
Wall Mount Switched Interlocked Socket



IP67 **Vidalı Bağlantı**
Screw Connection

Kutu Adedi Pack Unit	Ağırlık (Gr.) Weight (Gr.)	Kontak / Amper Poles / Ampere	100-130V 50-60 Hz 4h	200-250V 50-60 Hz 3P= 6h 4P-5P = 9h	380-415V 50-60 Hz 3P= 9h 4P-5P= 6h	480-500V 50-60 Hz 7h	>50-500V 300-500 Hz 10h	>50-500V 100-300 Hz 2h
			Kod / Cat. No.	Kod / Cat. No	Kod / Cat. No	Kod / Cat. No	Kod / Cat. No	Kod / Cat. No
1	940	**3x16**	3421-306-0700-4h	**3421-306-0600**	3421-306-1600-9h	3421-306-0300-7h		3421-306-1100-2h
1	970	**4x16**	3423-306-0700-4h	3423-306-0900-9h	**3423-306-0600**	3423-306-0300-7h	3423-306-1100-10h	3423-306-1100-2h
1	1000	**5x16**	3406-306-0700-4h	3406-306-0900	**3406-306-0600**	3406-306-0300-7h		3406-306-1100-2h
1	940	**3x32**	3425-306-0700-4h	**3425-306-0600**	3425-306-1600-9h	3425-306-0300-7h		3425-306-1100-2h
1	970	**4x32**	3427-306-0700-4h	3427-306-0900-9h	**3427-306-0600**	3427-306-0300-7h	3427-306-1100-10h	3427-306-1100-2h
1	1000	**5x32**	3408-306-0700-4h	3408-306-0900-9h	**3408-306-0600**	3408-306-0300-7h		3408-306-1100-2h

Teknik Resim
Technical Drawing

Kontak-Amper Contact-Ampere	a	Kablo Kesiti Cable Dia.
3x16A	129	1,5-4 mm²
4x16A	129	
5x16A	129	
3x32A	130	2,5-10 mm²
4x32A	130	
5x32A	130	

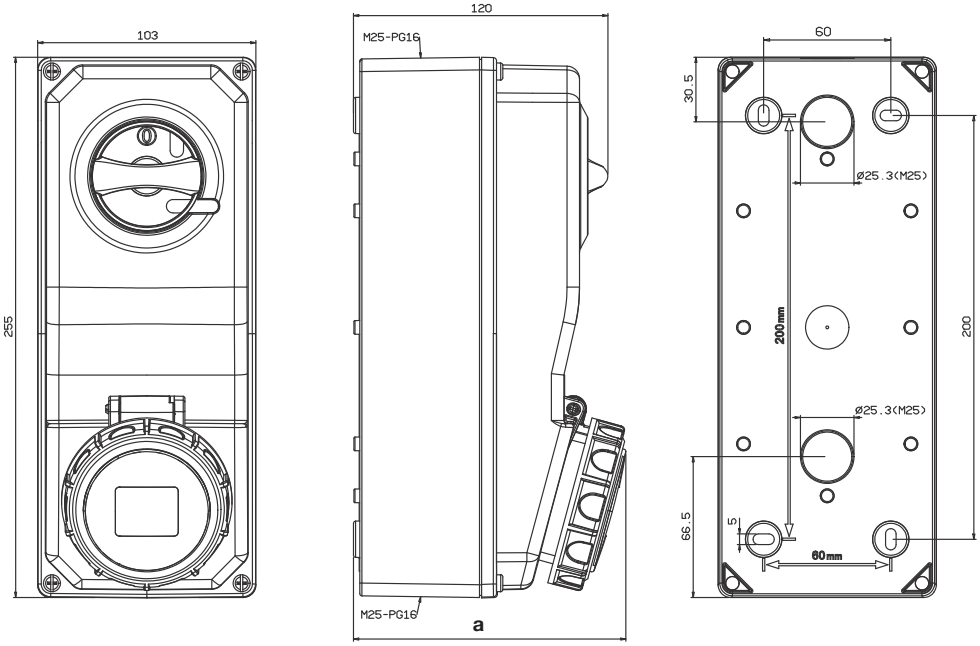

Tel: +90 232 880 90 01
Fax: +90 232 880 90 02

info@tpelectric.com.tr

Kemalpasa O.S.B. 600 Sk. No:364
35730 Kemalpasa / IZMIR - TURKEY