Technical Data Sheet

Date: 03/11/2022

5x32A CEE Norm Connector

Ref. No: 3107-304-1601



Pack Unit	Weight
10	225 gr.

Technical Informations

Ampere	32A
Voltage	380 - 415 V. AC
Hertz	50 - 60 Hz
Protection Class	IP 44
Clock Postion	6h
Number Of Poles	5 (3P + N + E)
Contact Material	Brass (CuZn)
Housing Material	PA6
Connection Type	Screw
Operation Temp. (-25 / +40IEC60309)	-25 / +80 (1 hour -100° C)

Dimensions

a	162
b	107
c	97
Ød	11-20,5
Cable Diameter (Min.)	2,5 mm²
Cable Diameter (Max.)	6 mm²

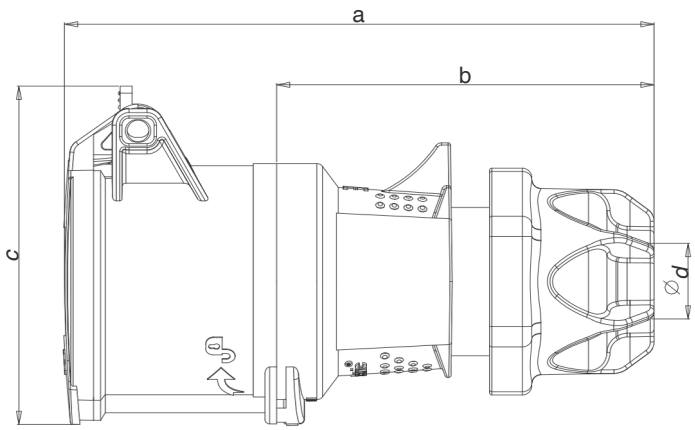

Different Earth Contact Positions (Clock Positions)

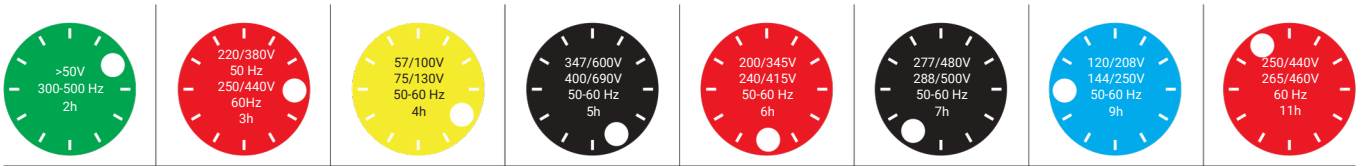

3107-304-1101-2h	3107-304-1601-3h	3107-304-0701-4h	3107-304-0301-5h	3107-304-1601	3107-304-0301-7h	3107-304-0901-9h	3107-304-1601-11h

Tel: +90 232 880 90 01
Fax: +90 232 880 90 02

info@tpelectric.com.tr

Kemalpaşa O.S.B. 600 Sk. No:364
35730 Kemalpaşa - İZMİR / TÜRKİYE